Plan on point 0,000

Total per rooms:
S = 12.78 sq m
V = 38.34 cub m
Sflat = 43.44 sq m
Svis = 52.49 sq m
P = 22.49 r m
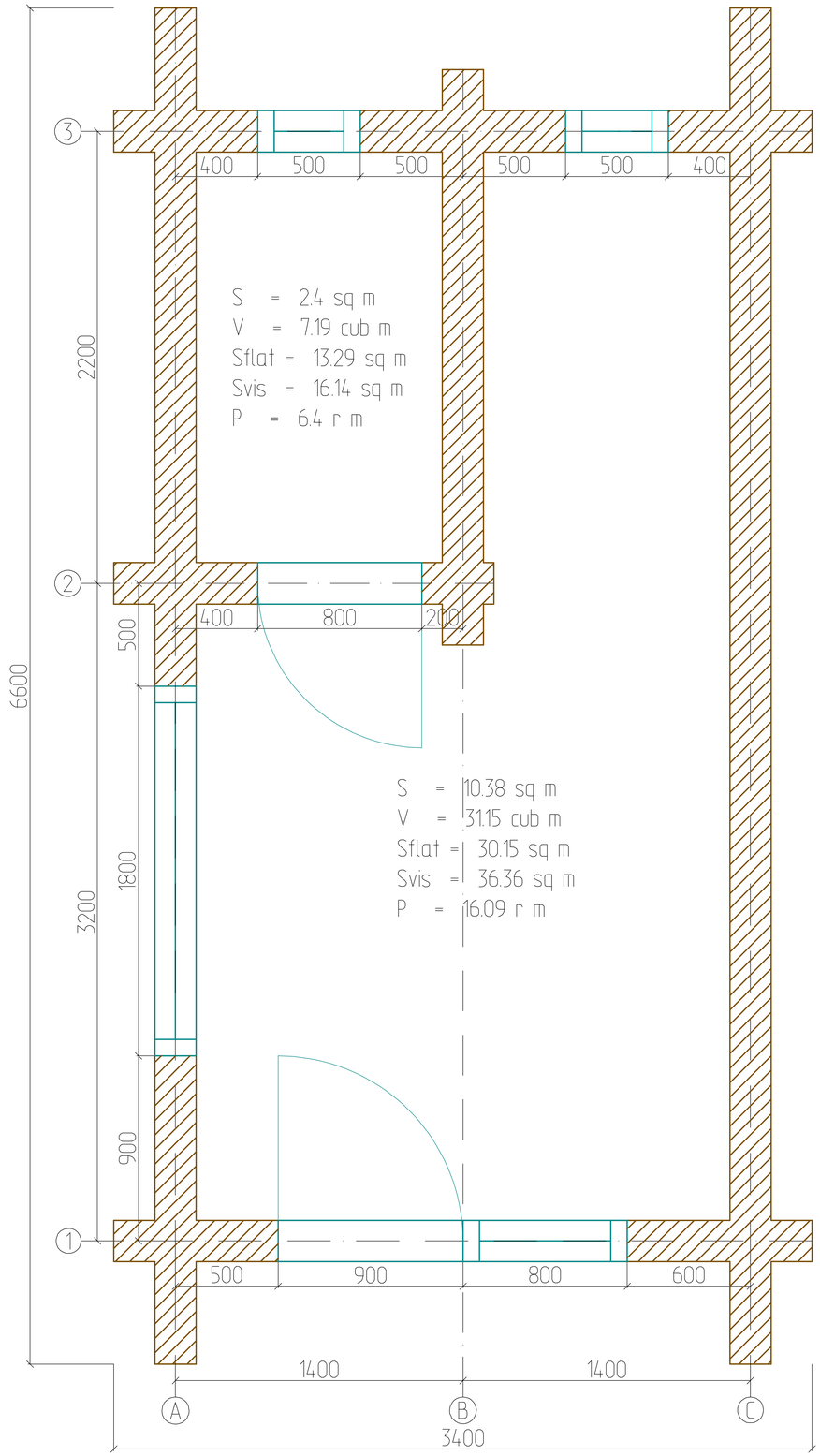
S = 17.45 sq m
Sflat = 40.91 sq m
Svis = 48.52 sq m
P = 23.59 r m